PRODUCT SHEET

Description:
Fifteen Screw, M6x50mm, Bronze Plated, Pointed

Item number:
12.01.030-0

Units	Box	Carton	HS Code	Barcode
Pcs.		1500	7318155898	5704866019064

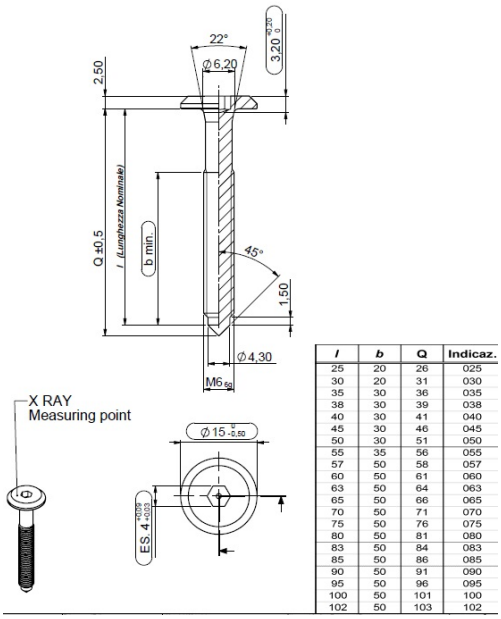

l	b	Q	Indicaz.
25	20	26	025
30	20	31	030
35	30	36	035
38	30	39	038
40	30	41	040
45	30	46	045
50	30	51	050
55	35	56	055
57	50	58	057
60	50	61	060
63	50	64	063
65	50	66	065
70	50	71	070
75	50	76	075
80	50	81	080
83	50	84	083
85	50	86	085
90	50	91	090
95	50	96	095
100	50	101	100
102	50	103	102

SISO A/S
Mileparken 11
DK-2740 Skovlunde
Denmark
VAT: DK 24786013

Phone +45 45 830 900

www.siso.dk
siso@siso.dk

Danske Bank
Nytorv Branch
Copenhagen
SWIFT: DABADKKK

Account no.
4180 3112 112936
IBAN Account
DK7230003112112936